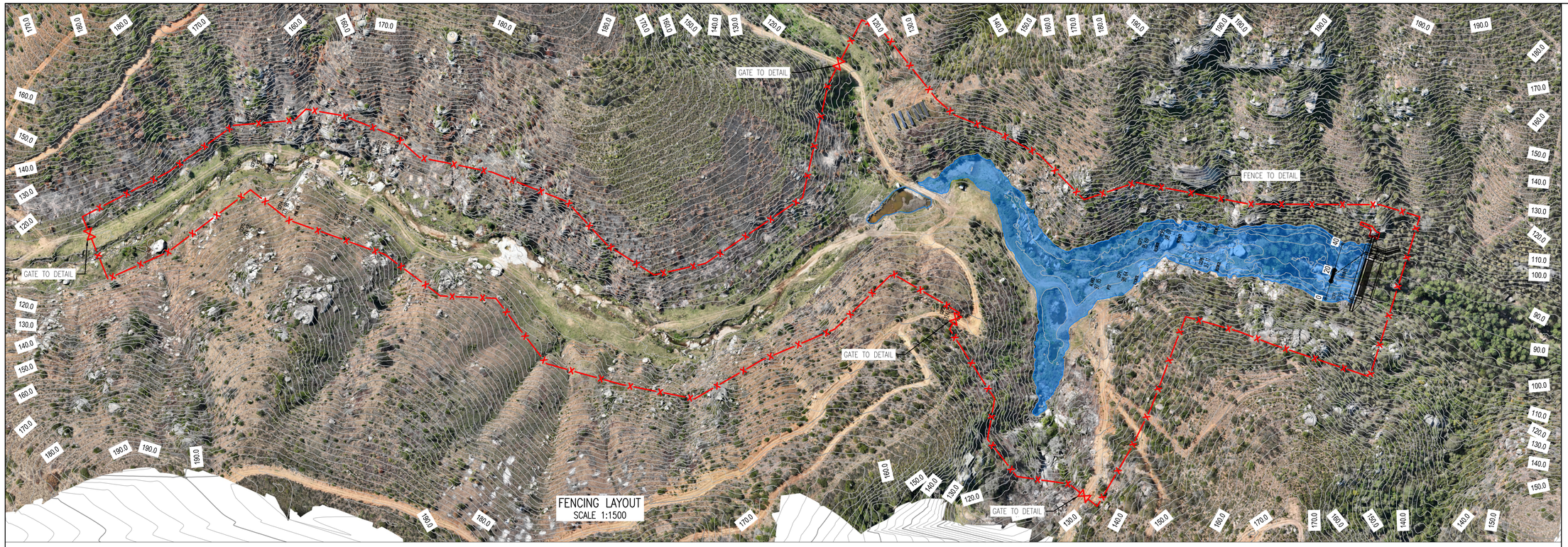

FENCING LAYOUT
SCALE 1:1500

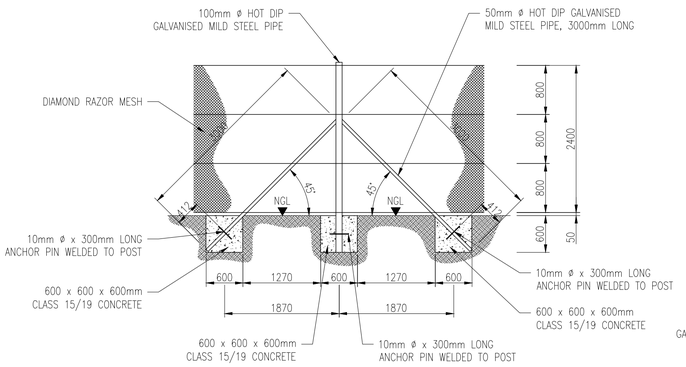

TYPICAL INTERMEDIATE POST
SCALE 1:50

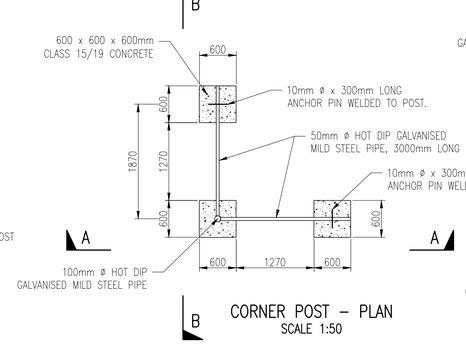

CORNER POST – PLAN
SCALE 1:50

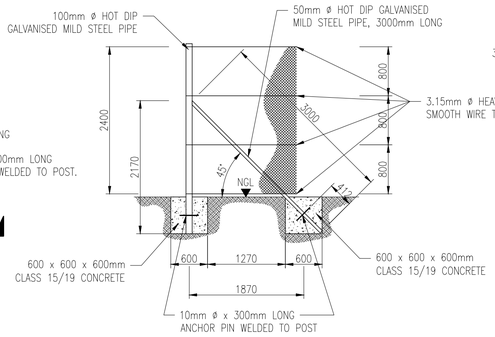

SECTION A–A
SCALE 1:50

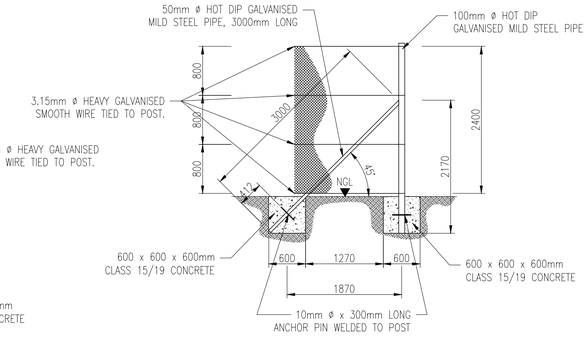

SECTION B–B
SCALE 1:50

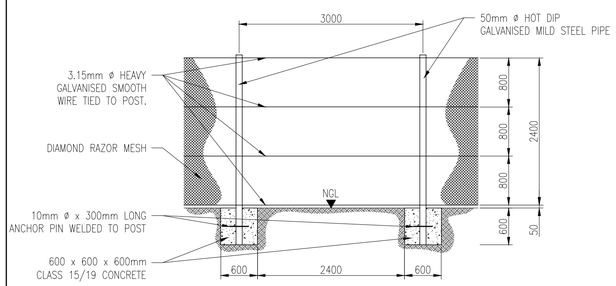

TYPICAL STANDARDS POST
SCALE 1:50

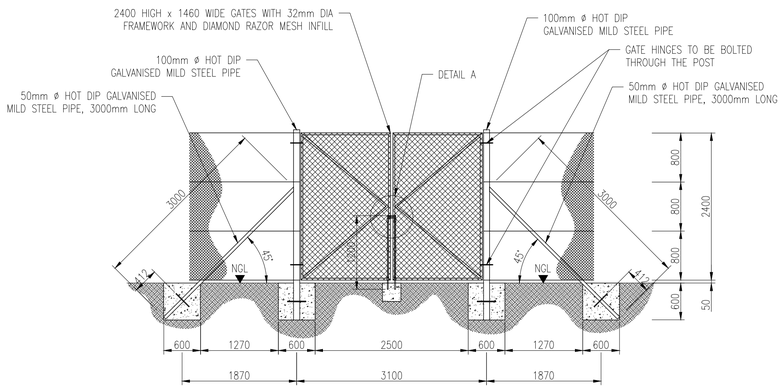

GATE AND POST DETAILS
SCALE 1:50

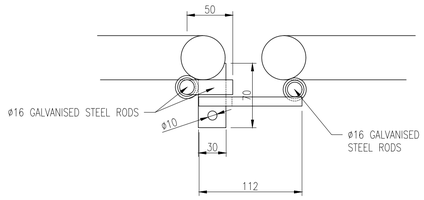

SECTION C–C
N.T.S.

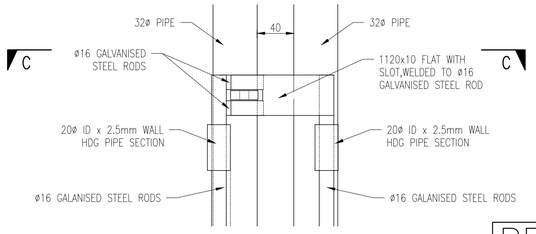

DETAIL A
N.T.S.

PRELIMINARY

GENERAL NOTES

1. ALL DIMENSIONS ARE IN MILLIMETERS UNLESS STATED OTHERWISE.
2. ALL ELEVATIONS ARE IN METERS ABOVE MEAN SEA LEVEL.
3. ALL SECTIONS OF THE SPILLWAY, GRAVITY WALL INTAKE AND STILLING BASIN SHALL BE FOUNDED ON ROCK PREPARED AS SPECIFIED AND AS APPROVED BY THE ENGINEER. IN THE CROSS SECTIONAL DIRECTION, THE FOUNDATION SHOULD BE PREFERABLY LEVEL OD SLOPING DOWNWARDS TOWARDS THE UPSTREAM FACE. WHERE APPROPRIATE, THE FOUNDATION MAY BE EXCAVATED IN SUITABLE SLOPES AS SHOWN ON THE DRAWINGS OR AS APPROVED BY THE ENGINEER.
4. CONCRETE GRADES SHALL BE AS FOLLOWS;
   - 15MPa/38mm TO GRAVITY WALLS;
   - 25MPa/38mm TO OGEE CREST;
   - 25MPa/38mm TO STILLING BASIN SLAB, WALLS AND RETURN CHANNEL WALLS;
   - 30MPa TO SHOTCRETE WALLS.
5. CONCRETE COVER TO REINFORCEMENT TO BE 80mm UNLESS OTHERWISE SHOWN.
6. PREPARED ROCK SURFACES AND HORIZONTAL CONSTRUCTION JOINTS SHALL RECEIVE 10mm BEDDING MORTAR CONSISTING OF CEMENT AND SAND MIXED IN THE SAME PROPORTIONS AS THAT IN THE CONCRETE TO BE PLACED ON TOP OF THE MORTAR.
7. CONCRETE FINISHES SHALL BE AS FOLLOW;
   - SMOOTH TO SURFACES EXPOSED TO VIEW.
   - ROUGH TO SURFACES AGAINST WHICH BACKFILL OR FURTHER CONCRETE IS TO BE PLACED.
8. CONSTRUCTION JOINTS ELEVATION SHALL BE TO SUIT THE CONTRACTORS CONSTRUCTION METHOD APPROVED BY THE ENGINEER.
9. WATERSTOP OF APPROVED MAKE SHALL BE BUILT INTO THE CONCRETE WORK AT CONSTRUCTION JOINTS WHERE SHOWN ON THE DRAWINGS. THE WATERSTOP SHALL BE HELD IN CORRECT POSITION AND ALIGNMENT DURING CONCRETING.
10. ALL EXPOSED CONCRETE CORNERS SHALL HAVE 40mm CHAMFERED EDGE OR AS SHOWN ON THE DRAWINGS.
11. SIZE OF HOLES:
    - 38mm DIAMETER FOR CONSOLIDATION HOLES;
    - 38mm DIAMETER FOR CURTAIN HOLES;
    - 70mm DIAMETER FOR SPILLWAY DRAINAGE HOLES

LEGEND

NGL	–	NEATURAL GROUND LEVEL
MASL	–	METRES ABOVE SEA LEVEL
FL	–	RELATIVE LEVEL (IN MASL)
NOC	–	NON OVERSPILL CREST
FSL	–	FULL SUPPLY LEVEL
RC	–	REINFORCED CONCRETE
CJ	–	CONSTRUCTION JOINT

REV.	DESCRIPTION	DATE

Checked by Registered Professional

Name: R.Ciza — Signature — Date: 30 - 10 - 2025

Client: OUTENIQUA GAME FARM

Consultant: G&G Consulting Engineers (Pty) Ltd
120 Villers Road, Walmer, Port Elizabeth 6070
P.O Box 12510, Central Hill, Port Elizabeth 6006
tel: 041 582 3835 fax: 041 582 3429 info@ggandg.co.za

Project: OUTENIQUA FARM DAM

Drawing Description: DAM – FENCING LAYOUT AND DETAILS

Designed: R. Ciza	Checked: P. GOUWS
Drawn: P. Bester	Approved: R. Ciza
Scale: AS SHOWN	Date: 2025 / 10 / 30

Consultant Drawing Number: 2025/DAM/C/L/007
Revision: 00
Paper Size: A1

Z:\PROJECTS\PRIVATE\2505 Farm Dam for Outeniqua Game Farm\6. Design\02-Preliminary\Drawings\DAM POSITION WITH SURVEY_rev03.dwg